Model No.

90 Cat Cottonball

Includings

Tips for making EUGY

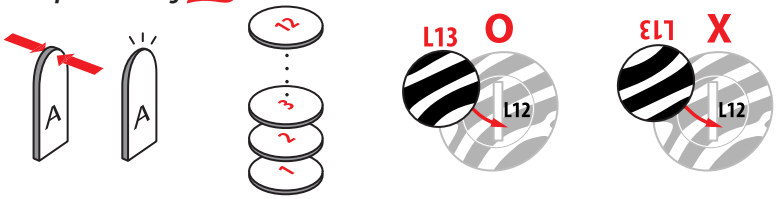

Visit EUGY.COM for more information & meet other EUGY friends!

Warning! Choking Hazard - Small parts.
Achtung! Erstickungsgefahr. Kleine Teile.
Attention! Risque d'étouffement. Petits éléments.
Avvertenza! Rischio di soffocamento. Piccole parti.
¡Advertencia! Peligro de atragantamiento. Piezas pequeñas.
警告! 窒息危险 - 小零件 / 경고! 질식 위험. 작은 부품 포함
警告! 窒息の危険性 - 小さなパーツ

0-3

NEW ZEALAND.COM
Licence No.100337

Patent Info http://www.eugy.com/patent

EUGY™, dodoland™ are trademarks of dodoland ©2023 dodoland

Complies with European Standards EN71-1, EN71-2, EN71-3
Conforms to ASTM D-4236 & ASTM F963
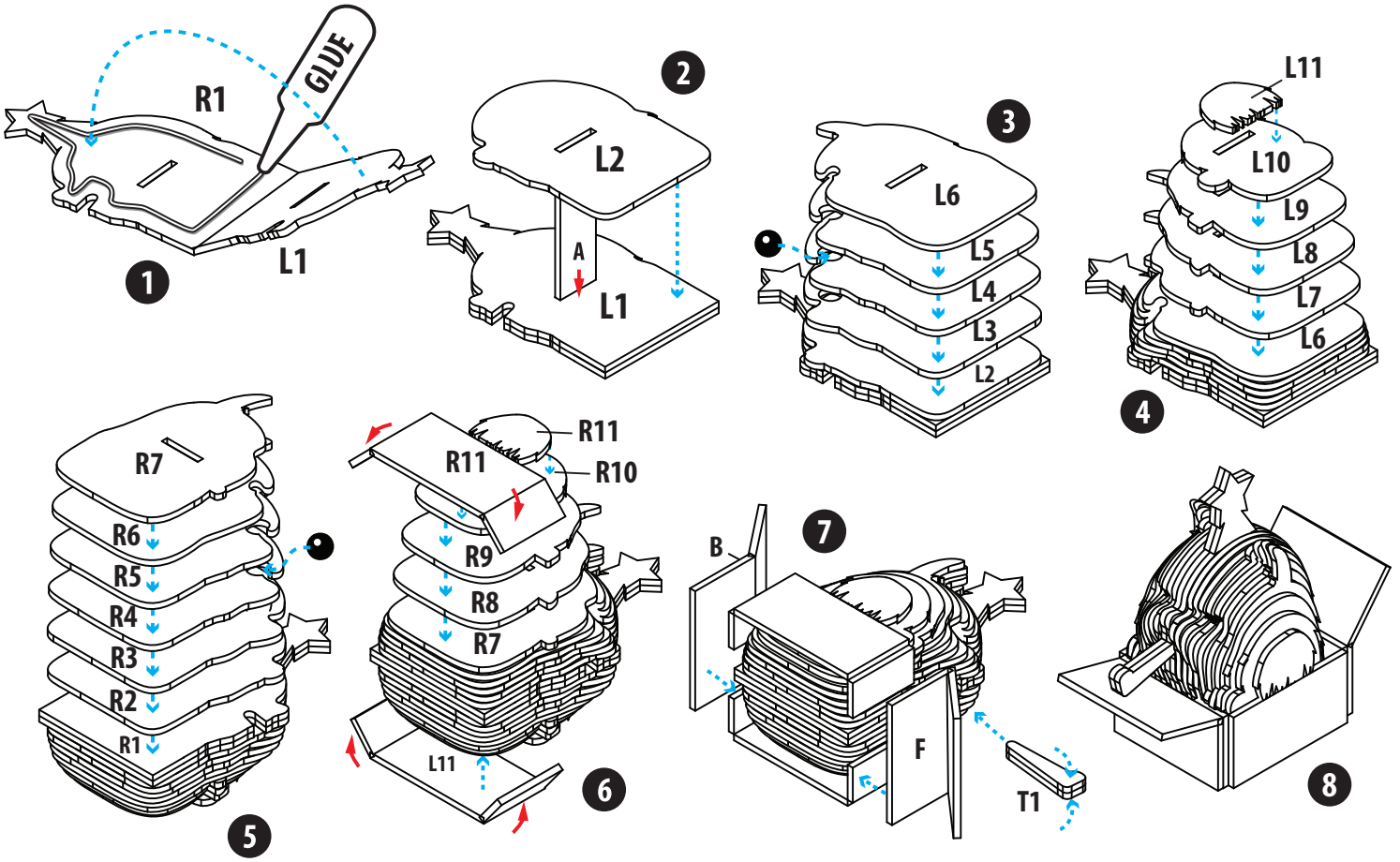
Glue — No Glue